www.macis.com.sg

(MULTI-PORT) GAUGE VALVE

Descriptions

Multi-port gauge valves are designed to be used with gauge mounting and other instrument tie-ins in the process industries, without requiring additional penetrations of the main piping. Valve with male inlet connection is available threaded or prepared for welding and with either standard or extended inlets.

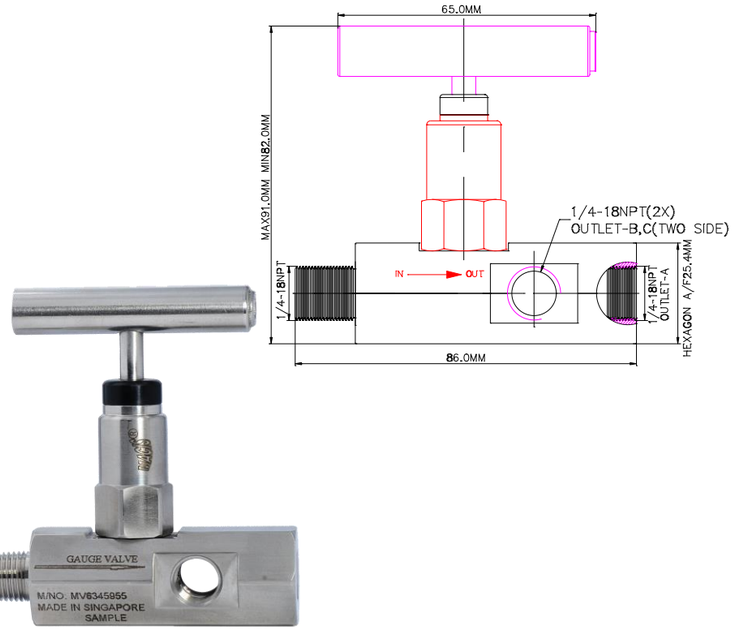

Ordering Ref : MV 6345955-H

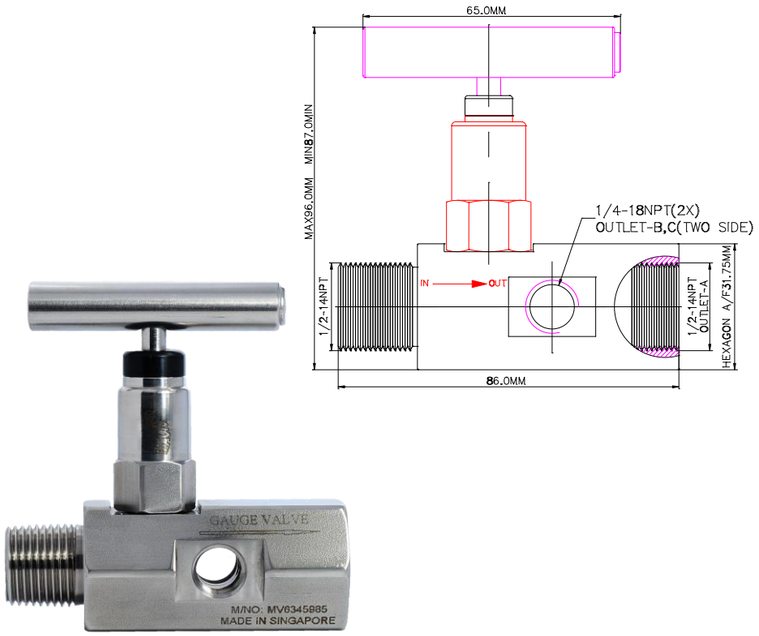

Ordering Ref : MV 6345985-H

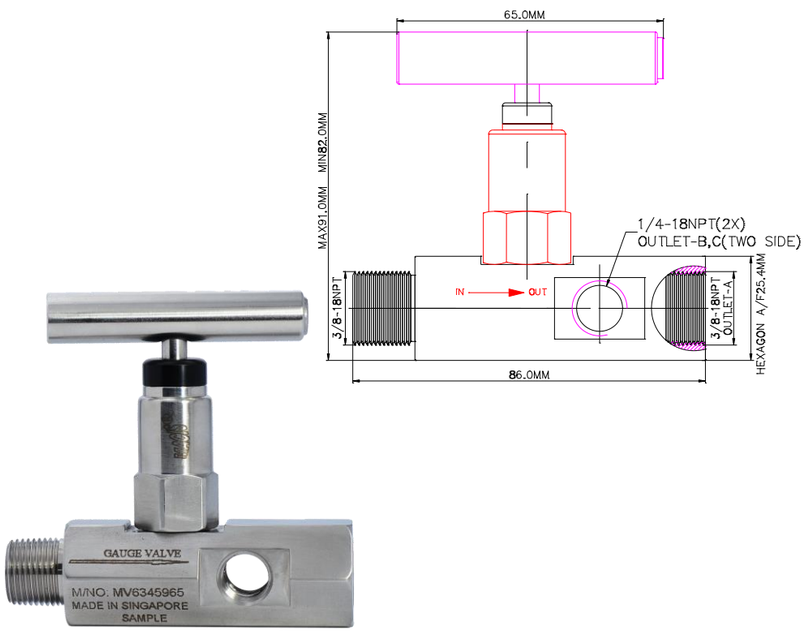

Ordering Ref : MV 6345965-H

Specification

Control Application	**universal use wherever more than one outlet is require**
Working Media	**Oil**
Max Working Pressure	**10,000psi(689.4bar)**
Temperature Range	**- 30°C to 120°C** ***Other Temperature Ranges available. Consult Factory***
Material(Valve Body)	**316 L**
Seal Material	**Nitrile Rubber(NBR)** ***Other Seal Material Are Available Upon Request***
Options	**Body Material and end connections other option available upon request**

Distinctions

Ordering Ref No	Prot Connection Size	Net Weight	Orifice Size	Flow Rate
MV 6345955-H :	*IN Port : 1/4"-18NPT M , OUT Ports – (A,B&C) :1/4"-18NPT F*	*400gm*	Ø5.0mm ($^{13}/_{64}$")	Cv = 0.9
MV 6345985H :	*IN Port : 1/2"-14NPT M, OUT Ports* { *–A : 1/2"-14NPT F*; *-B & C : 1/4"-18NPT F* }	*530gm*	Ø6.0mm ($^{15}/_{64}$")	Cv = 1.3
MV 6345965-H :	*IN Port : 3/8"-18NPT M, OUT Ports* { *-A :3/8"-18NPT F*; *-B & C : 1/4"-18NPT F* }	*400gm*	Ø5.0mm ($^{13}/_{64}$")	Cv = 0.9

***Measurement stated are with tolerance of +/-10%. Optional Parts/Material are available upon request.**

MACIS PTE LTD
Blk 3015A Ubi Road 1, #01-02 & #01-06 Kampong Ubi Industrial Estate, Singapore 408705
Email : sales@macis.com.sg TEL : 65-6749 6011 / 65-6749 7882 FAX : 65-6749 1398